THIS DRAWING IS UNPUBLISHED. RELEASED FOR PUBLICATION -,- .
© COPYRIGHT - By - ALL RIGHTS RESERVED.

LOC	DIST
ES	00

REVISIONS

P	LTR	DESCRIPTION	DATE	DWN	APVD
	A1	REVISED PER ECO-11-005033	21MAR11	RK	HMR

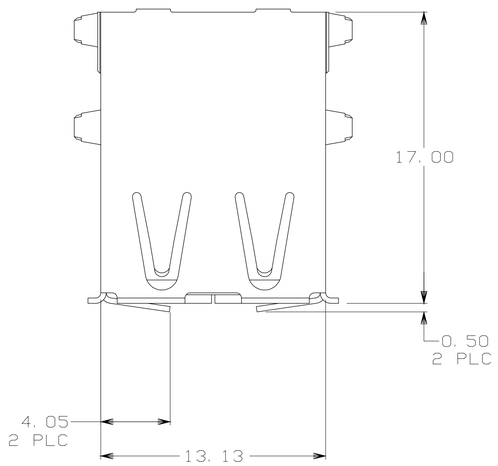

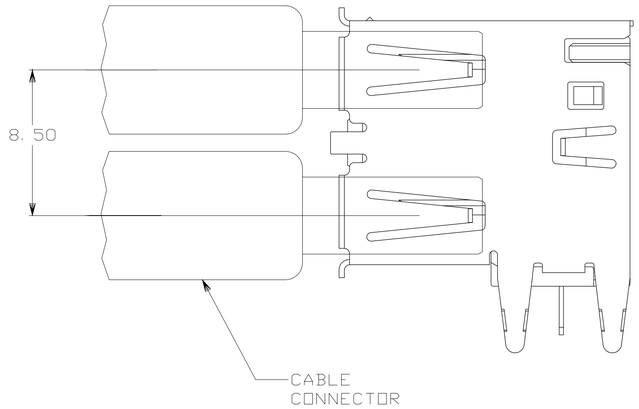

1. MATERIAL:
   SHELL & CONTACTS- COPPER ALLOY.
   HOUSING- UL 94V-0 RATED, THERMOPLASTIC, SEE TABLE.
2. PLATING:
   CONTACTS- 0.076 MICROMETERS MINIMUM GOLD OVER 0.76 MICROMETERS MINIMUM PALLADIUM-NICKEL ON MATING AREA. OR CONTACT ALTRENATE PLATING 0.76 MICROMETERS MINIMUM GOLD ON MATING AREA.
   3.80 MICROMETERS MINIMUM TIN ON SOLDER TAILS.
   BOTH OVER 1.27 MICROMETERS MINIMUM NICKEL.
   SHELL: 2~5μm THICK TIN
3. DATUM AND BASIC DIMENSIONS ESTABLISHED BY CUSTOMER.
4. RECOMMENDED PC BOARD THICKNESS OF 1.57.

LEAD FREE

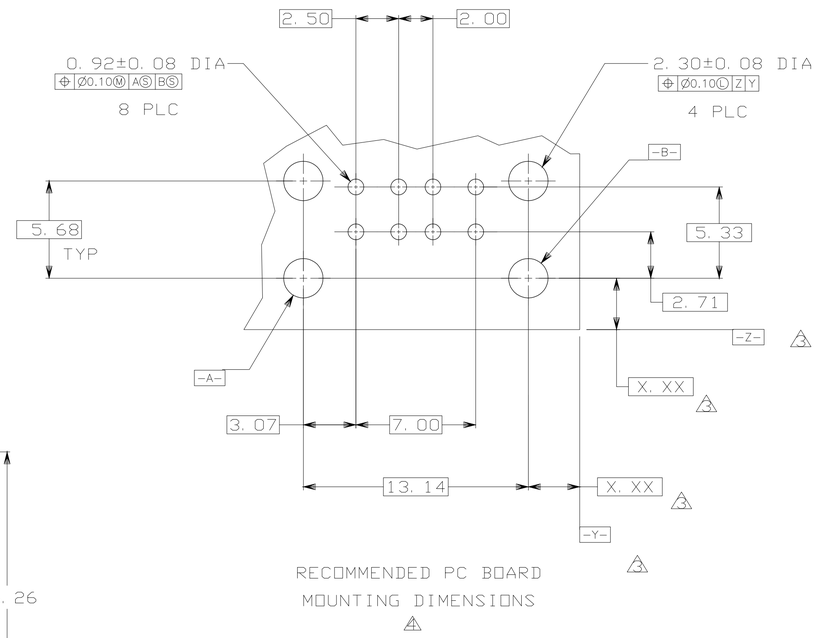

RECOMMENDED PC BOARD MOUNTING DIMENSIONS
4

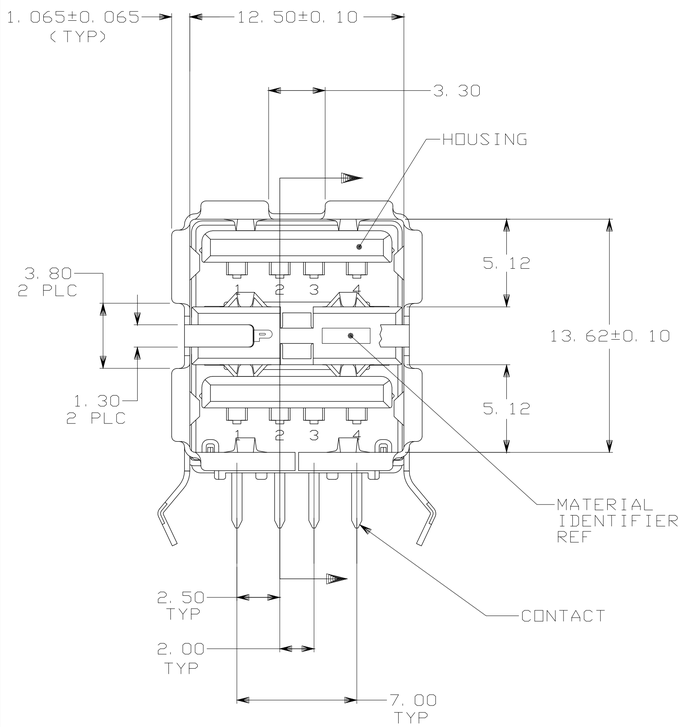

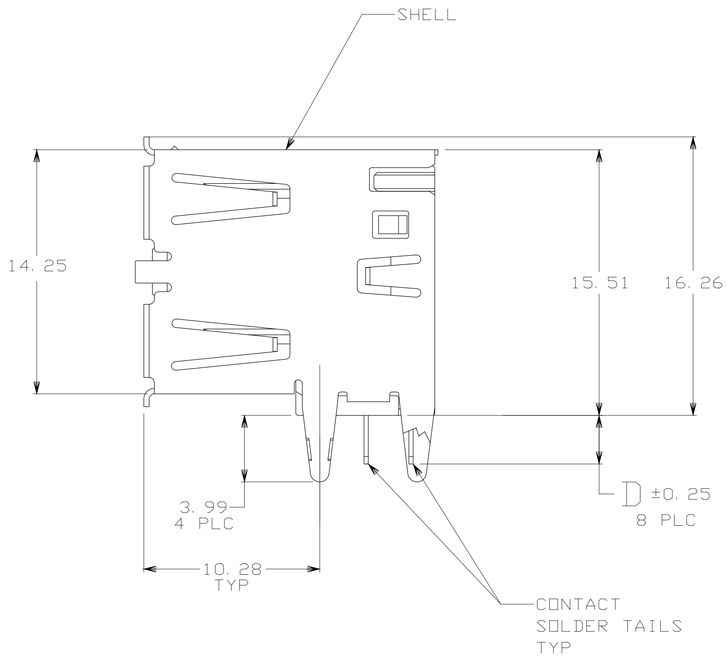

YES	2.29±0.25	BLACK	5787745-5
YES	2.84±0.25	BLACK	5787745-4
NO	2.84±0.25	NATURAL	5787745-3
NO	2.29±0.25	BLACK	5787745-2
NO	2.84±0.25	BLACK	5787745-1
HIGH TEMPERATURE COMPATIBLE	D	HOUSING COLOR	PART NUMBER

THIS DRAWING IS A CONTROLLED DOCUMENT.

DIMENSIONS: mm

TOLERANCES UNLESS OTHERWISE SPECIFIED:
0 PLC ± -
1 PLC ± -
2 PLC ± -
3 PLC ± -
4 PLC ± -
ANGLES ± -

MATERIAL -
FINISH -

DWN LEO ZHOU 26OCT2004
CHK STEVEN YAO 26OCT2004
APVD I.ENOMOTO 26OCT2004
PRODUCT SPEC —
APPLICATION SPEC —
WEIGHT —

TE Connectivity

NAME RECEPTACLE ASSEMBLY, RIGHT ANGLE, STACKED, THRU-HOLE, USB

SIZE	CAGE CODE	DRAWING NO	RESTRICTED TO
A1	00779	C-5787745	—

CUSTOMER DRAWING

SCALE 1:1 SHEET 1 OF 1 REV A1

4805 (3/11)